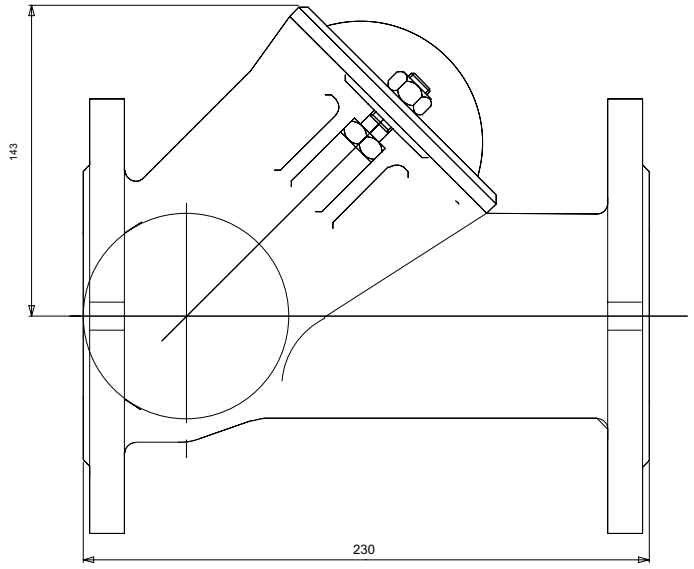

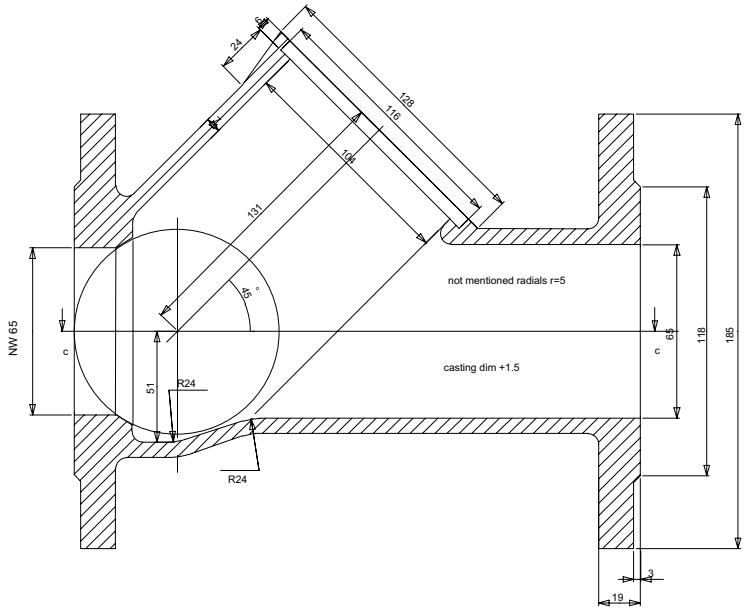

MONTI VALVES TYPE 52 NW 65